PRECIMA



FDS Series –
compact enclosed brake



FDS Series – compact enclosed brake

The compact FDS IP 65 Brake Series was developed as solution for applications which require an economical totally enclosed brake which is protected against dirt, dust or moisture. Because of the specially designed magnet body this brake is most effective as a holding or parking brake with emergency stop features.

Applications: Industrial Trucks, Stair Lifts, Solar fields, CNC Machines,etc.

Features:

- Compact design
- O-Ring Seals against the Motor End Shield or Flange
- Easy, Simple and Fast Assembling

Optionen:

- Manual Hand Release
- Mounting Flange



FDS Series – compact enclosed brake

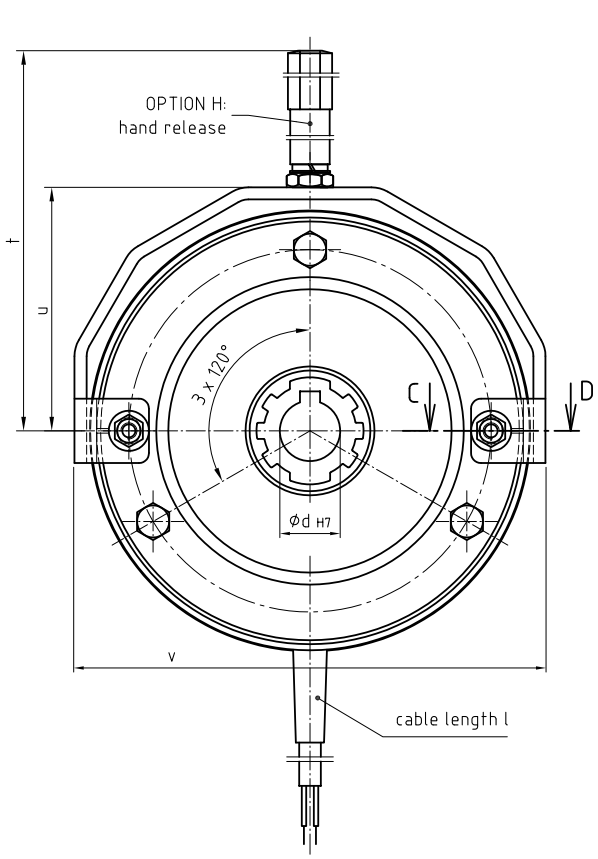

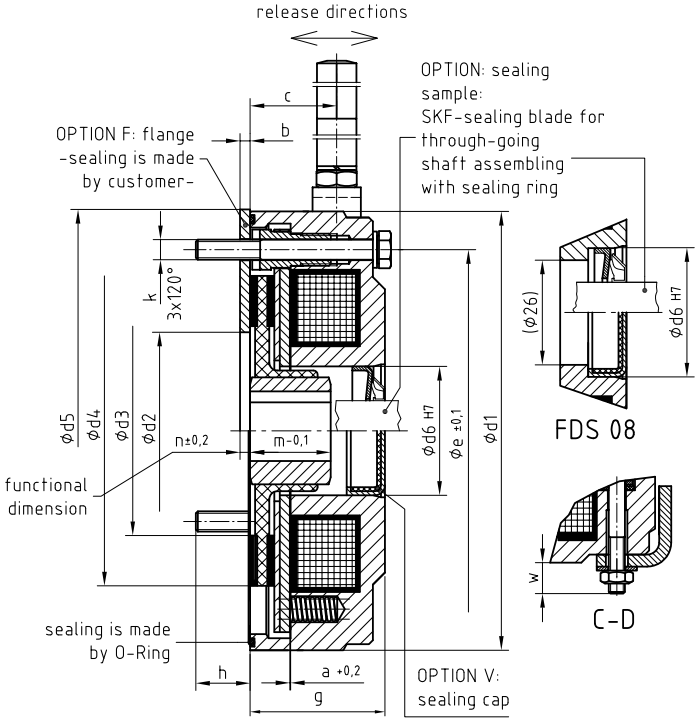

Size	Braking torque (Nm)	P 20 °C (Watt)	a (+0,2)	b	c	Hub ød H7	ød1	ød2	ød3	ød4
FDS 08	5 / 7,5**	28	0,2	1,5	20,5	11 /12 / 15*	89	38	42	62
FDS 10	10 / 15**	35	0,2	2	21,5	15 / 20*	109	49	50	78
FDS 13	20 / 25**	46	0,3	2,5	24,5	20 / 25	134	60	62	96

Size	ød5	ød6 (H7)	øe (±0,1)	g	h	k (3x120°)	l	m (-0,1)	n (±0,2)	t	u	v	w
FDS 08	90	32***	72	31,5	8,5	M4x40	400	18	1,5	103	53	94	6
FDS 10	110	32	90	31,5	9,5	M5x40	400	20	2	111	60,5	117	7,7
FDS 13	135	42	112	39,5	12	M6x50	500	20	2,5	138	76,5	142	10

Dimensions in mm, Standard keyway in accordance with DIN 6885/1 - JS9

*) Keyway in accordance with DIN 6885/3 - JS9, **) Holding brake with emergency stop features

***) not continuous, see special section view FDS 08

Company Information


Headquarters and Assembly Line at Bückeburg-Röcke


Plant - CNC Production at Bückeburg-Müsingen


Plant - Helpsen

PRECIMA Magnettechnik GmbH was founded in the year 1981 and is today established as an independent, medium sized, innovative family owned brake manufacturer. With our staff of more than 160 employees we develop and produce a wide range of electro-magnetic operated brakes and clutches for all kinds of applications in machine and other industries. Our standard range of products covers a performance scope of braking torques between 0.5 and 1,600 Nm.

Thanks to our advanced CNC machining technology and well organized assembly lines we produce more than 550,000 units per year. The high rate of self manufactured parts provides us with a maximum of flexibility and allows for short response times.
Our own highly qualified and experenced engineering and development departments are specialized in producing customized brake solutions on a very high technical and economic standard.

RoHS COMPLIANT 2002/95/EC

06-2023 GB