PRECIMA
MAGNETTECHNIK GmbH



FDB
Spring loaded brake

www.precima.de

FDB Spring loaded brake

Since many years our FDB brake has a name as absolute reliable brake for use in almost every application. As standard this brake is available in 10 different sizes for static or dynamic braking with re-settable air gap design. Due to several variations and options this brake series is preferred by motor manufactures for universal use

C-Version
for adjustable braking torque

N-Version
with fixed braking torque

Options:
- manual hand release
- micro switch or inductive sensor to monitor brake function or wear limit
- friction plate or adopterflange
- taped bores for tacho maunting
- dust protection ring
- temperture feeler
- rest period heating
- low noise version
- IP 56 version with higher protection against corrosion





PRECIMA
MAGNETTECHNIK GmbH

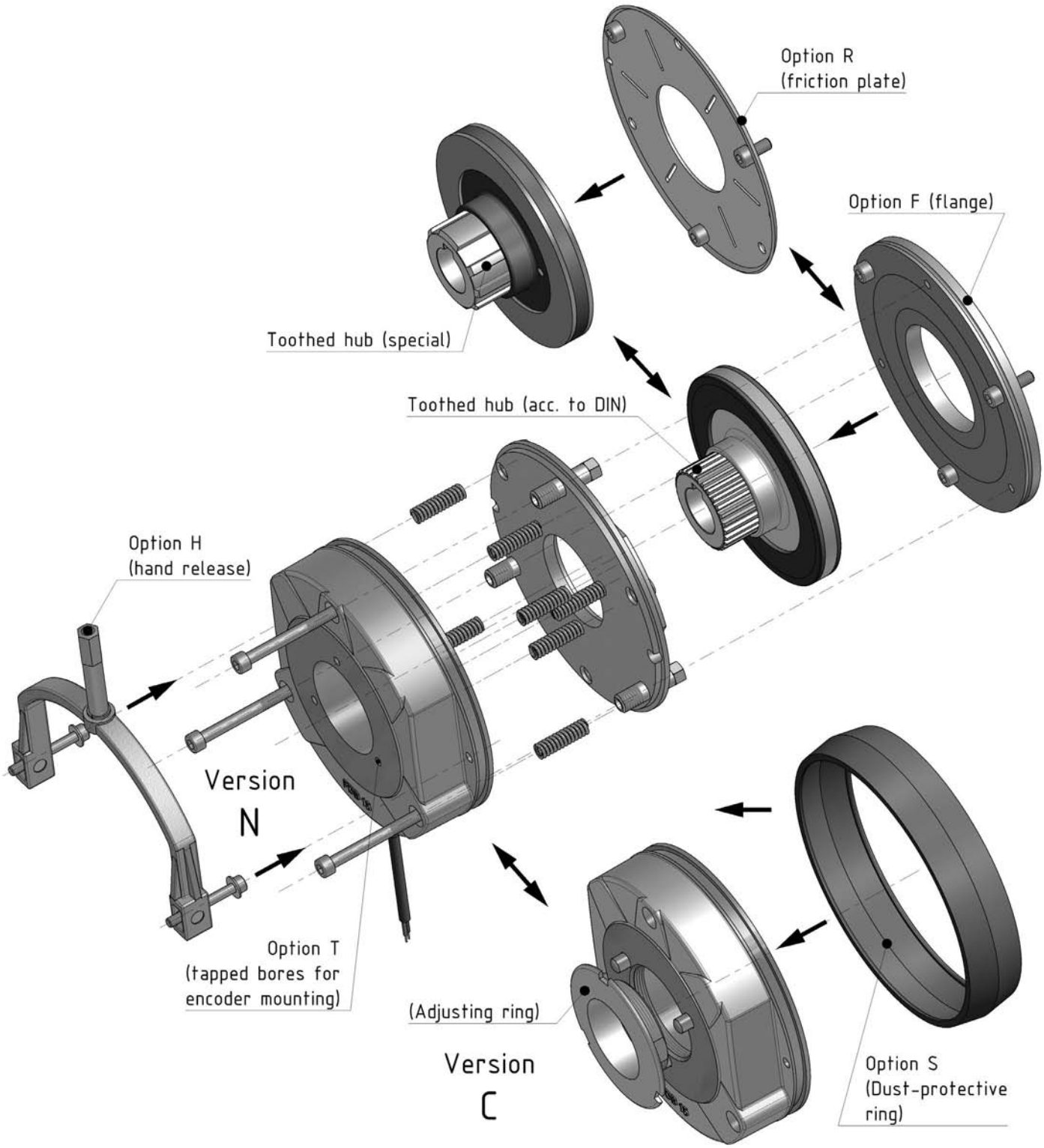
Option R
(friction plate)
Option F (flange)
Toothed hub (special)
Toothed hub (acc. to DIN)
Option H
(hand release)
Version
N
Option T
(tapped bores for
encoder mounting)
(Adjusting ring)
Version
C
Option S
(Dust-protective
ring)

Version N

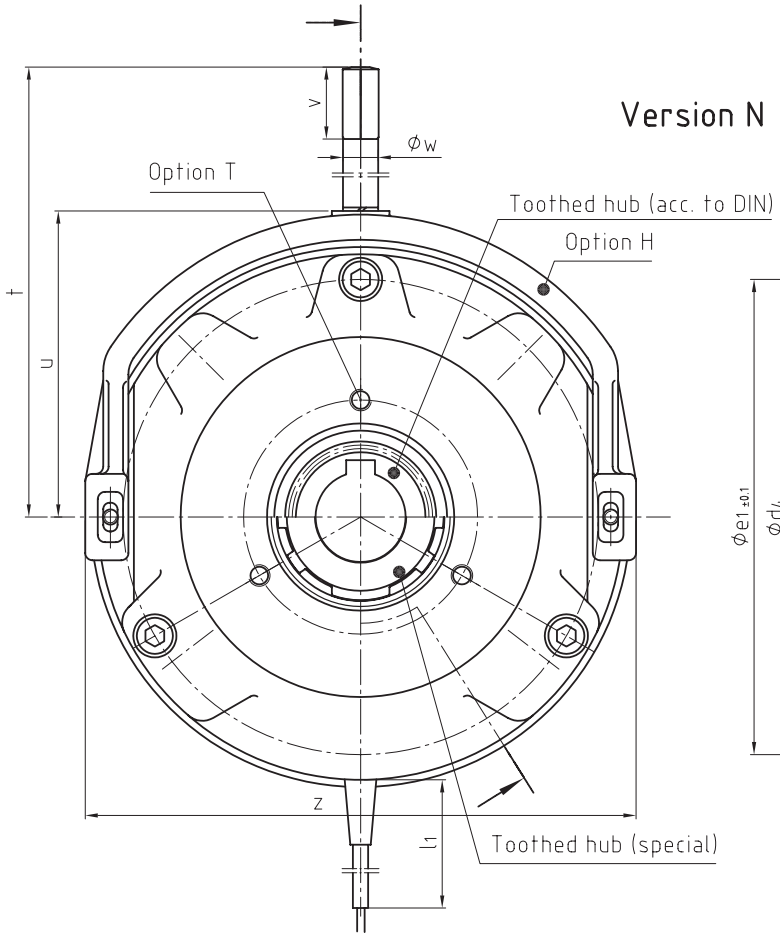

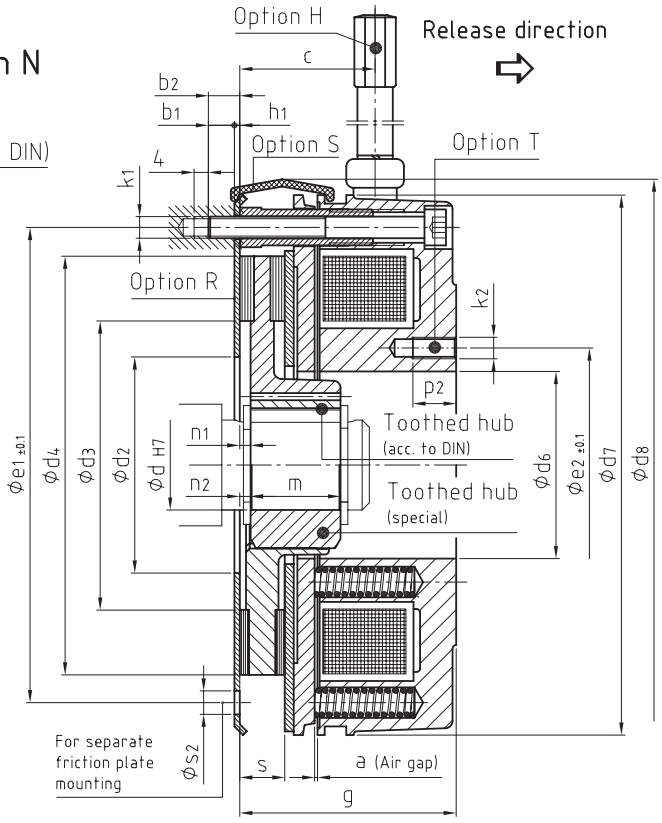

Flange

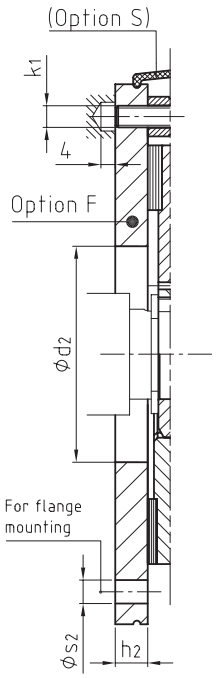

Version C

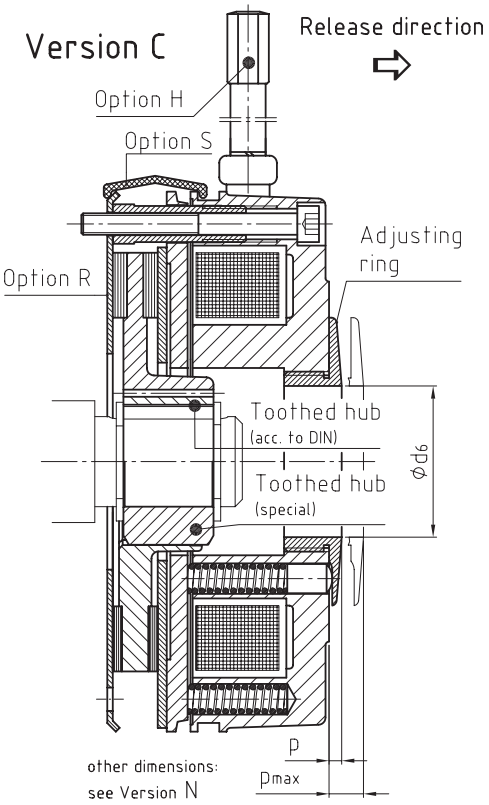

Version N

Size	Braking torque M_b [Nm]****	P 20 °C (Watt)	a	b1	b2	c	Hub diameter d H7	
							Toothed hub (special)	Toothed hub (acc. to DIN)
08	5**	22	0,2 +0,15	9	5,5	22	11/14*/15*	-
10	10**	28	0,2 +0,15	10,5	7	21	15/19*/20*	14/15
13	20**	34	0,3 +0,15	12	8,5	33	15/20/25	15/20
15	40**	45	0,3 +0,15	12	8,5	38	-	20/25/30
17	60**	55	0,3 +0,15	13	10	42	-	25/30/35*
20	100**	85	0,4 +0,15	13	10	48	-	30/35/40
23	150**	76	0,4 +0,15	15	12	51	-	35/40/45
26	250**	105	0,5 +0,2	20	12	57	-	40/45/50/55*
30	400**	140	0,5 +0,2	17	19	59	-	50/55/60/65*
40	1000**	144***	0,6 +0,2	-	17	69	-	65/70/75/80*

Size	d2	d3	d4	d6 H7 +++	d7	d8	e1 ±0,1	e2 ±0,1	g	h1	h2	k1	k2 +++
08	30	42	61,5	26	85	89	72	34	38,3	1,5	6	(3 x) M4	(3 x) M4
10	40	50	78	32	105	109	90	40	47,7	1,5	7	(3 x) M5	(3 x) M5
13	50	62	98	42	130	135	112	54	53,1	1,5	9	(3 x) M6	(3 x) M6
15	60	80	118,5	52	150	155	132	65	60,3	1,5	9	(3 x) M6	(3 x) M6
17	70	82	127,5	62	170	175	145	75	69,8	2	11	(3 x) M8	(3 x) M8
20	80	94	152	72	195	201	170	85	80,4	2	11	(3 x) M8	(3 x) M8
23	90	120	178	80	225	231	196	95	89,8	2	11	(3 x) M8	(3 x) M8
26	90	130	204	90	258	264	230	110	98,9	2	11	(3 x) M10	(6 x) M10
30	120	180	255	115	306	312	278	138	104,5	2	12,5	(6 x) M10	(6 x) M10
40**	150	258	330	150	400	408	360	180	120,6	-	18	(6 x) M12	(6 x) M12

Size	l1	m	n1	n2	p2 +++	s (new)	øs2 +	t	u	v	w	z
08	400	18	1,5	0,5	8	7,5 -0,1	3 x 4,5	100	55	15	8	89
10	500	20	2,5	1	12	8,5 -0,1	3 x 5,5	110	65	15	8	111
13	500	20	3,5	1,5	12	10,3 -0,1	3 x 6,5	135	75	20	10	132
15	600	25	3	-	12	12,5 -0,1	3 x 6,5	140	85	20	10	151
17	600	30	3	-	15	14,5 -0,1	3 x 8,5	165	97	25	12	172
20	600	30	3	-	15	16,0 -0,1	3 x 8,5	186	116	25	12	196
23	600	35	4	-	15	18,0 -0,1	3 x 8,5	200	128	25	12	224
26	600	40	4	-	25	20,0 -0,1	3 x 10,5	285	148	35	19	258
30	600	50	4	-	25	20,0 -0,1	6 x 10,5	310	175	35	19	304
40**	600	70	4	-	43++	22,0 -0,1	6 x 13	415	230	35	19	403

Version C

Size	Braking torque M_b [Nm]****	Adjusting of M_b			d6	k2	p	p_{max}	p2	a…z
		Reduction of Mb [Nm] / latching step	Number of latching steps	ΔM_{bmax} [Nm]						
08	5**	0,2	6	1,2	21	No option T	3	6	No option T	Other Dimensions: see schedule „Version N"
10	10**	0,2	12	2,4	25		3	9		
13	20**	0,3	12	3,6	35		3,5	9,5		
15	40**	1	9	9	45		3,5	8		
17	60**	1,3	12	15,6	54		4,5	10,5		
20	100**	1,5	18	27	60		7	14		
23	150**	2	24	48	65		8	17		

Standard keyway in accordance to DIN 6885/1-JS9
* Keyway in accordance to DIN 6885/3-JS9
** Standard braking torque (working brake)
Standard braking torque (holding brake): ca. 1,5 * M_b
*** Switched with fast acting rectifier (over-excitation)
**** Permissible deviations of Mb:
Working brake: -30% (new) // ±20% (run-in)
Holding brake: ±20% (new) // -10% / +30% (run-in)

Dimensions in mm
+ Bores at option R and F (Size 40: only option F)
++ separate inner pole: 15 mm without thread (through-hole)
+++ deviating dimensions and/or no option T at Version C
(see schedule "Version C")

PRECIMA MAGNETTECHNIK GmbH


Headquarters and Assembly Line at Bückeburg-Röcke


Plant II - CNC Production at Bückeburg-Müsingen



Company Information:

Precima Magnettechnik GmbH was founded in the year 1981 and is today established as an independent, medium sized, innovative family owned brake manufacturer. With our staff of more than 150 employees we develop and produce a wide range of electro-magnetic operated brakes and clutches for all kinds of applications in machine and other industries. Our standard range of products covers a performance scope of braking torques between 0.5 and 1,500 Nm.

Thanks to our advanced CNC machining technology and well organized assembly lines we produce more than 500,000 units per year. The high rate of self manufactured parts provides us with a maximum of flexibility and allows for short response times. Our own highly qualified and experienced engineering and development departments are specialized in producing customized brake solutions on a very high technical and economic standard.





04-2013 GB